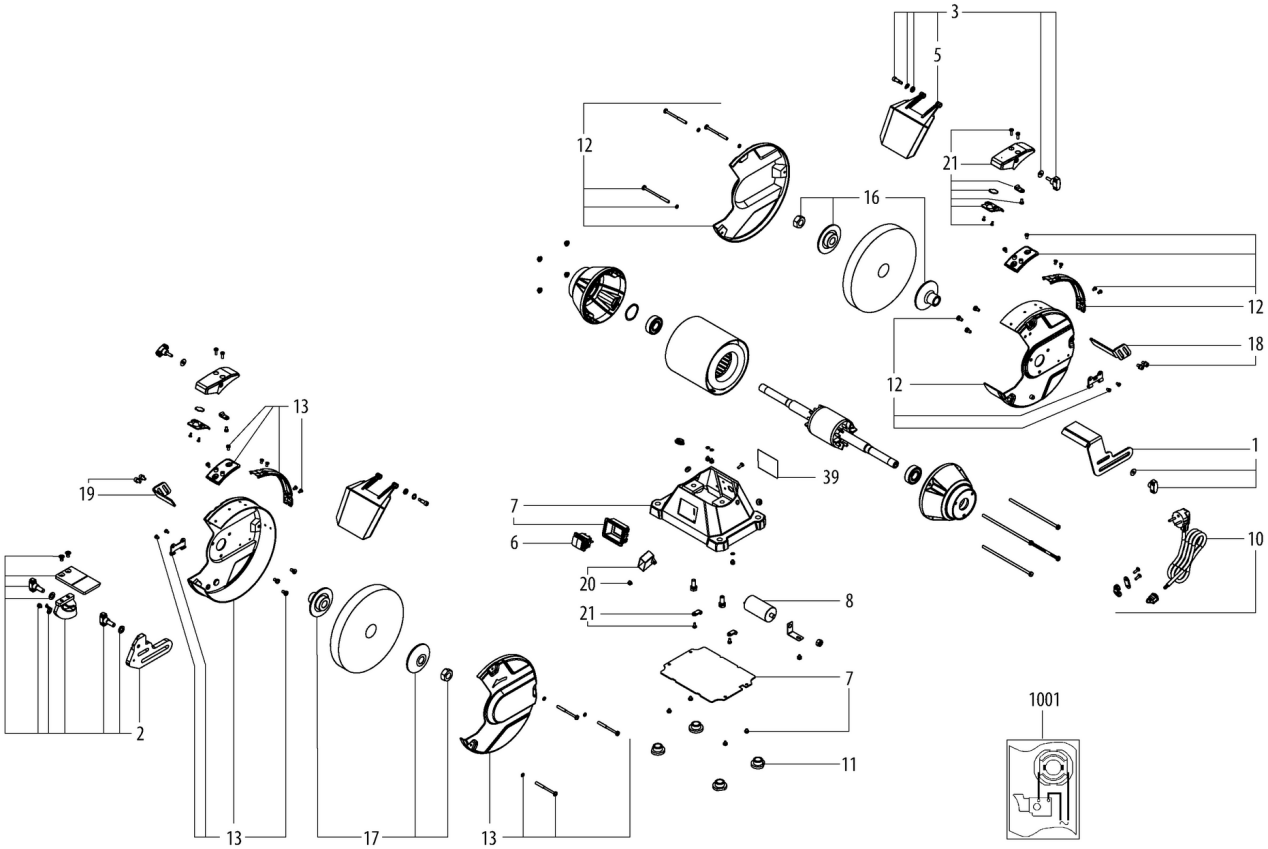
3
5
12
21
16
12
18
12
13
1
19
39
7
6
10
20
8
21
7
1001
2
11
13
17
13

Številka	Znesek	Številka za naročanje	Opis	PG
1	1	316077710	Workpiece support left cpl.	19
2	1	316077730	Workpiece support right cpl.	25
3	1	316077750	Eye protection left/right cpl.	16
5	1	344350900	Eye protection	13
6	1	343413240	Switch	21
7	1	316077770	Base compl.	29
8	1	343255420	Condenser 6mF	20
10	1	344534220	Cable compl.	22
11	1	344115290	Rubber foot	11
12	1	316077810	Wheel guard cpl.left	33
13	1	316077850	Wheel guard compl.right	33
16	1	316077910	Flange complete, left	23
17	1	316077940	Flange right compl.	23
18	1	316077960	SPARK PROTECTOR left compl.	16
19	1	316077970	SPARK PROTECTOR right compl.	16
20	1	316077980	LED transformer cpl.	23
21	1	316077990	LED cpl.	24
39	1	338080660	Rating plate 04200000 DS 200 Plus	12
1001	1	338511100	Diagram	