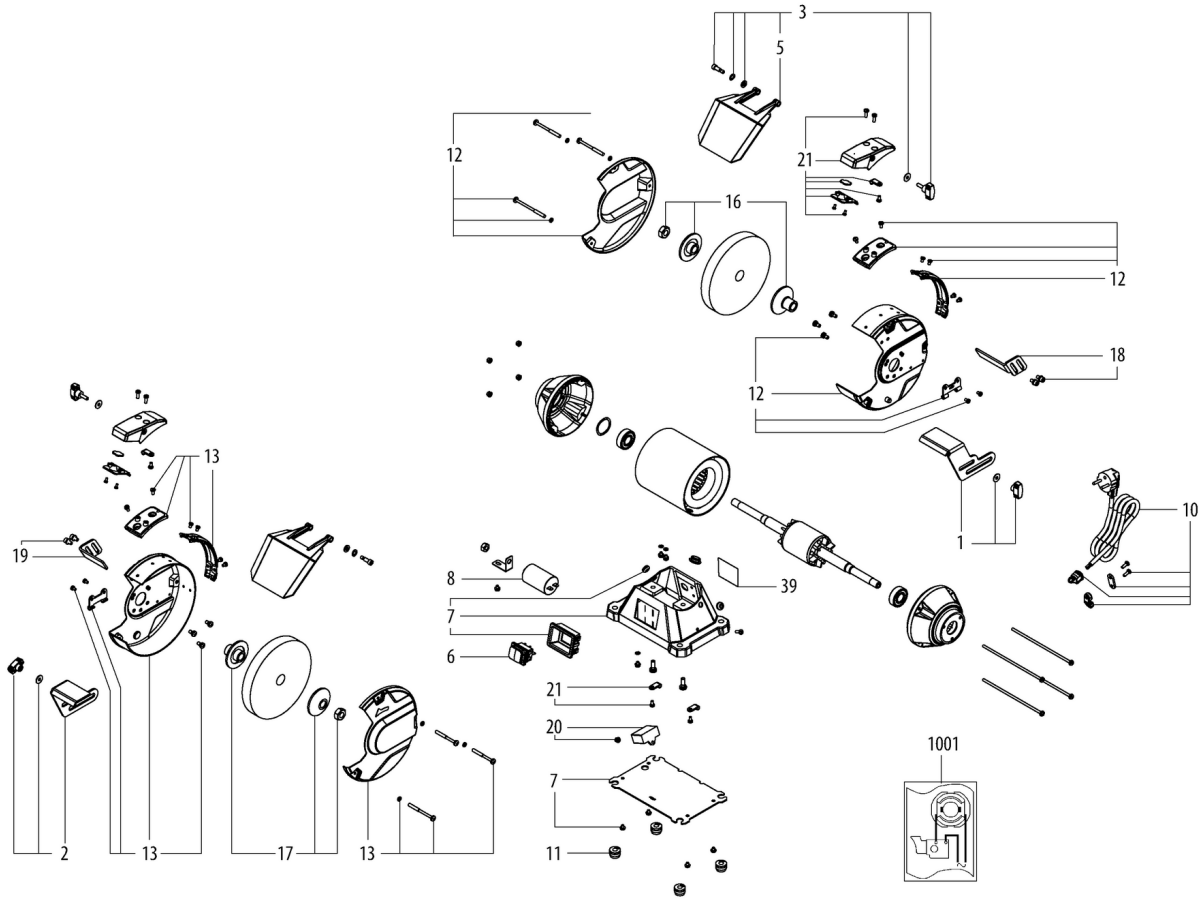
3
5
12
21
16
12
18
12
1
10
13
19
8
7
6
39
21
20
7
11
1001
2
13
17
13

Številka	Znesek	Številka za naročanje	Opis	PG
1	1	316077700	Workpiece support left cpl.	15
2	1	316077720	Workpiece support right cpl.	15
3	1	316077750	Eye protection left/right cpl.	16
5	1	344350900	Eye protection	13
6	1	343413240	Switch	21
7	1	316077760	Base compl.	27
8	1	343255410	Condenser 10mF	19
10	1	344534220	Cable compl.	22
11	1	344115280	Rubber foot	11
12	1	316077800	Wheel guard cpl.left	30
13	1	316077840	Wheel guard compl.right	30
16	1	316077890	Flange complete, left	20
17	1	316077930	Flange right compl.	20
18	1	316077960	SPARK PROTECTOR left compl.	16
19	1	316077970	SPARK PROTECTOR right compl.	16
20	1	316077980	LED transformer cpl.	23
21	1	316077990	LED cpl.	24
39	1	338080640	Rating plate 04160000 DS 150 Plus	12
1001	1	338511100	Diagram	