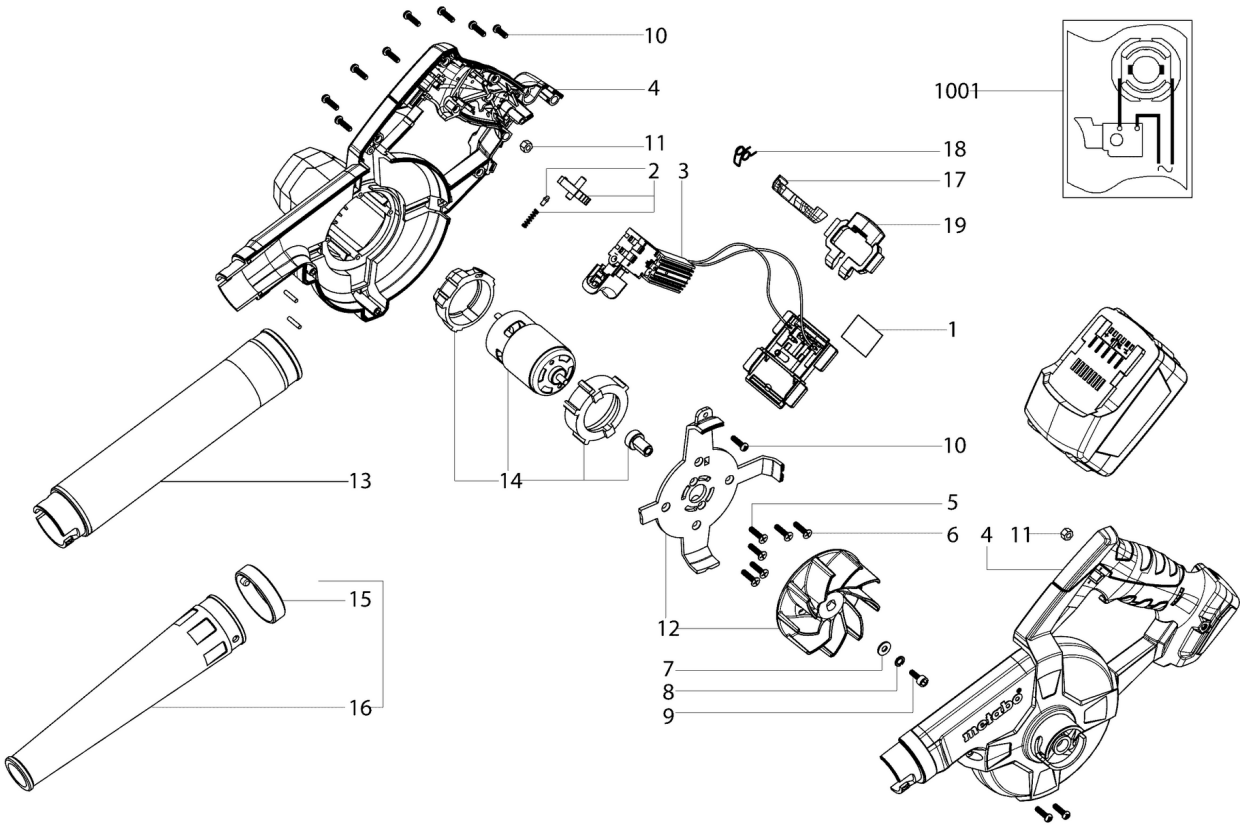
10
4
11
2
3
18
17
19
1001
1
10
5
6
4
11
13
14
15
16
12
7
8
9

Številka	Znesek	Številka za naročanje	Opis	PG
1	1	338064930	Rating plate,02242000 AG 18	11
2	1	316093200	Selector wheel compl.	15
3	1	316093210	Switch compl.	33
4	1	316093220	Housing compl.	31
5	2	141112180	Countersunk screw	11
6	4	141123520	Self-tapp. counters. screw	11
7	1	141150120	Washer	11
8	1	141150270	Spring washer	11
9	1	141113670	Cap screw	12
10	11	141123770	Fillister head screw	11
11	2	141130090	Hexagonal nut	11
12	1	330007030	Fan with motorflange	21
13	1	316093180	Pipe compl.	21
14	1	316093190	Motor compl.	34
15	1	343442260	Slotted ring	14
16	1	316093170	Rubber nozzle compl.	25
17	1	343394770	Pressure plate	11
18	1	342022460	Spring clip	11
19	1	343394790	Switch slide	11
1001	1	338510110	Wiring diagram	