3 601 E00 500
Stand 16-05
Issue 21-02-26

Fig. /Abb. 1

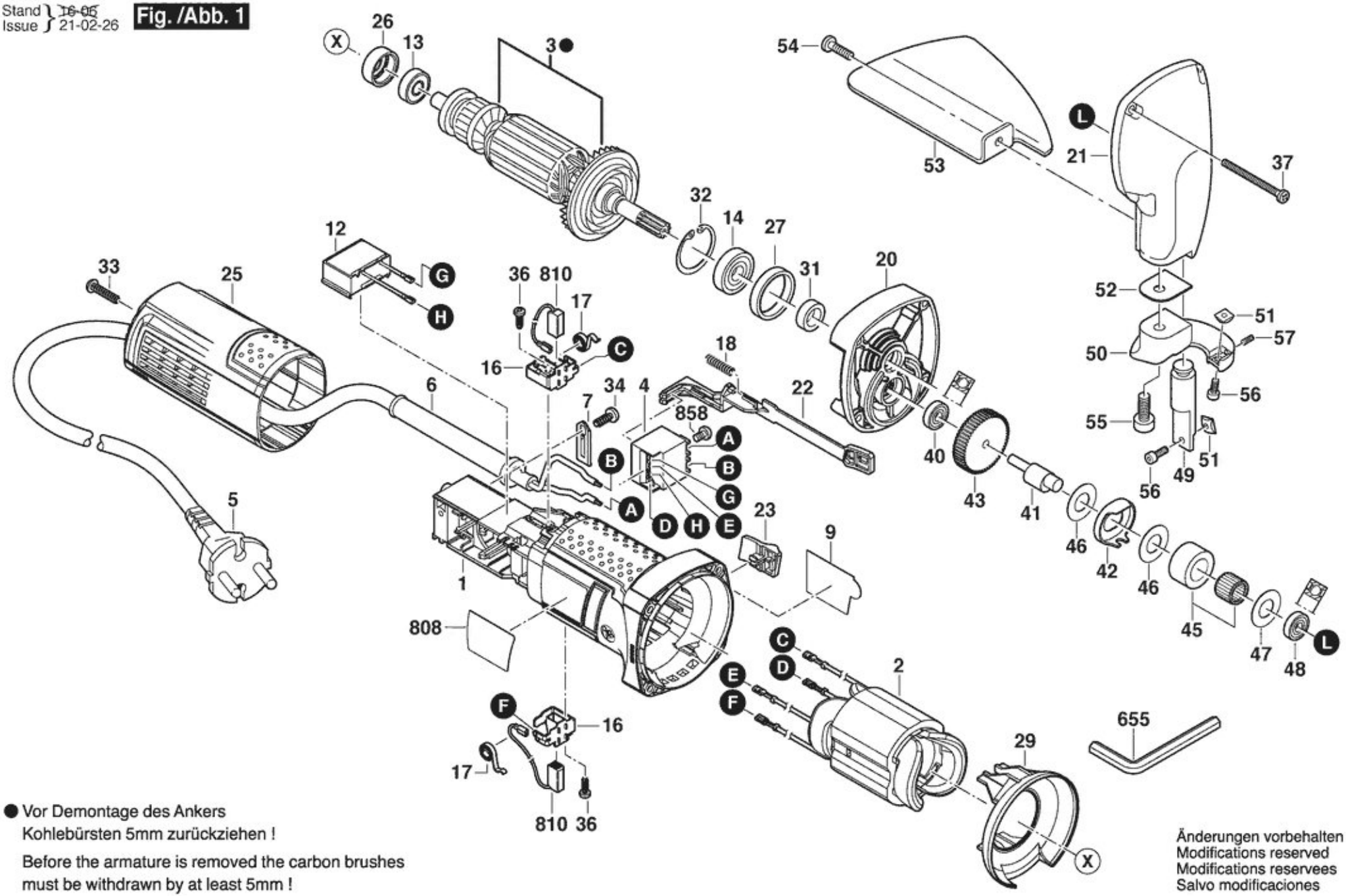

● Vor Demontage des Ankers
Kohlebürsten 5mm zurückziehen !

Before the armature is removed the carbon brushes must be withdrawn by at least 5mm !

Änderungen vorbehalten
Modifications reserved
Modifications reservees
Salvo modificaciones